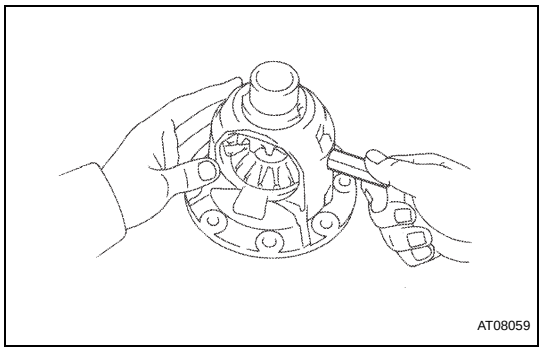

3. REMOVE FRONT DIFFERENTIAL PINION SHAFT NO.1

(a) Remove the front differential pinion shaft No.1 from the front differential case.

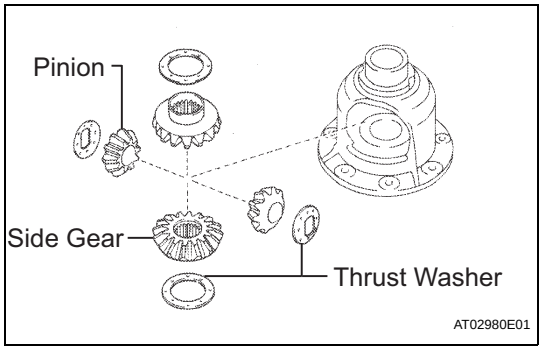

4. REMOVE FRONT DIFFERENTIAL SIDE GEAR

(a) Remove the 2 front differential pinions, 2 front differential side gears and 4 thrust washers.

INSPECTION

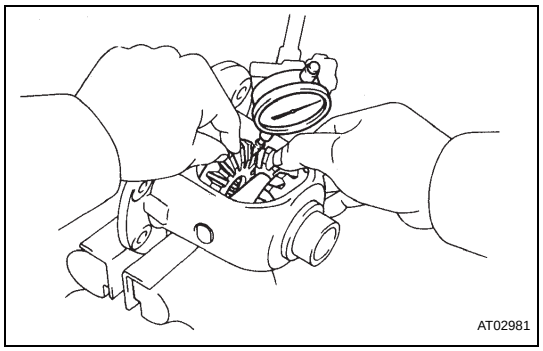

1. INSPECT DIFFERENTIAL SIDE GEAR BACKLASH

(a) Measure the differential side gear backlash while holding 1 front differential pinion toward the front differential case.

Standard backlash:

0.05 to 0.20 mm (0.0020 to 0.0079 in.)

If the backlash is out of the specified range, install a correct thrust washer to the differential side gear.

(b) Referring to the table below, select thrust washers which will ensure that the backlash is within specification. Try to select washers of the same size for both sides.

Thrust washer thickness: mm (in.)

Thickness	Thickness
0.95 (0.0374)	1.10 (0.0433)
1.00 (0.0394)	1.15 (0.0453)
1.05 (0.0413)	1.20 (0.0472)

If the backlash is not within the specified range, install a thrust washer of a different thickness.

REASSEMBLY

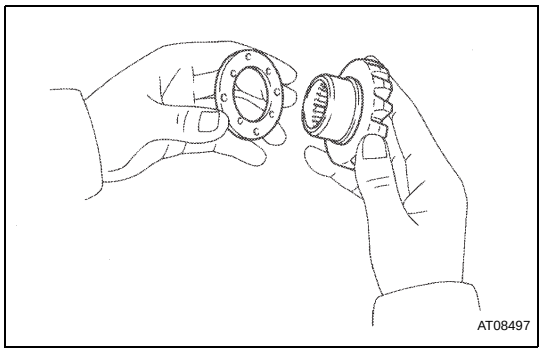

1. INSTALL FRONT DIFFERENTIAL SIDE GEAR

(a) Install the 2 thrust washers to the front differential side gears 2 each.

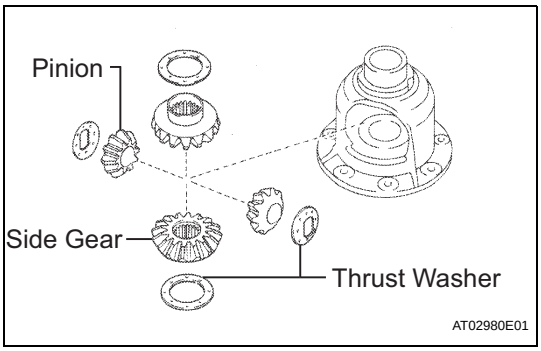

(b) Install the 2 front differential side gears with the 2 thrush washers, 2 front differential pinions, 2 pinion thrust washers in to the front differential case.

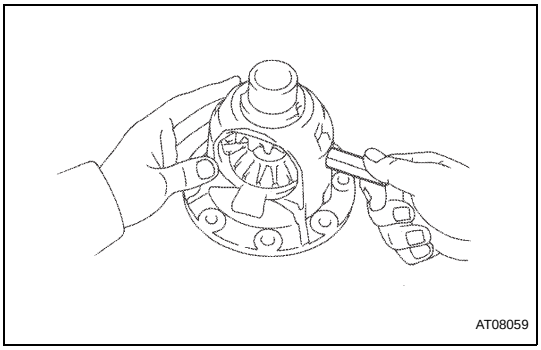

2. INSTALL FRONT DIFFERENTIAL PINION SHAFT NO.1

(a) Install the front differential pinion shaft No.1 so as to align the lock pin holes in both the pinion shaft and front differential case.

3. INSPECT DIFFERENTIAL SIDE GEAR BACKLASH (See page AX-245)

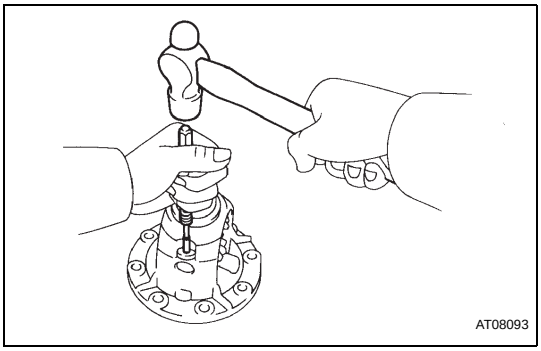

4. INSTALL FRONT DIFFERENTIAL PINION SHAFT STRAIGHT PIN

(a) Using a pin punch and hammer, drive the front differential pinion shaft straight pin into the hole in the front differential pinion shaft through the front differential case.

AX

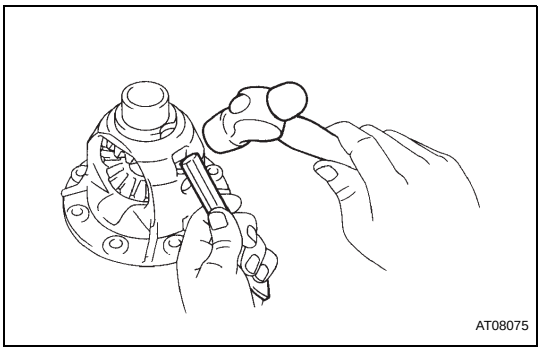

(b) Stake the front differential case.

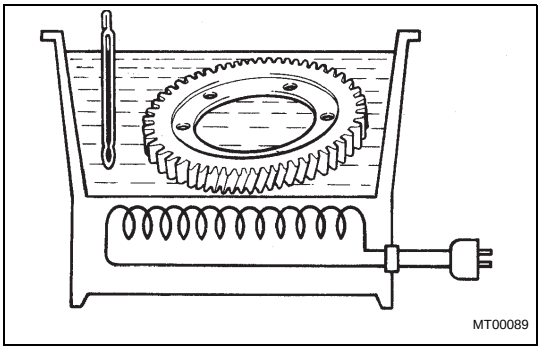

5. INSTALL FRONT DIFFERENTIAL RING GEAR

(a) Clean the contact surface of the front differential case.

(b) Heat the front differential ring gear in water and boil for 10 minutes.

(c) Carefully remove the front differential ring gear from the water.

(d) After the moisture on the front differential ring gear has completely evaporated, quickly install the front differential ring gear to the front differential case.

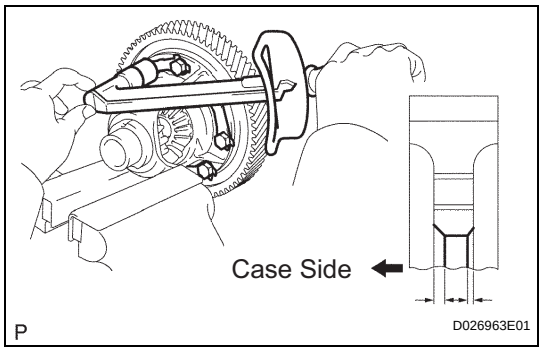

(e) Install 4 new front differential ring gear set bolt lock plates and 8 bolts, tightening them temporarily and evenly. When the front differential ring gear has cooled sufficiently, fully tighten the 8 bolts.
Torque: 97 N*m (985 kgf*cm, 71 ft.*lbf)

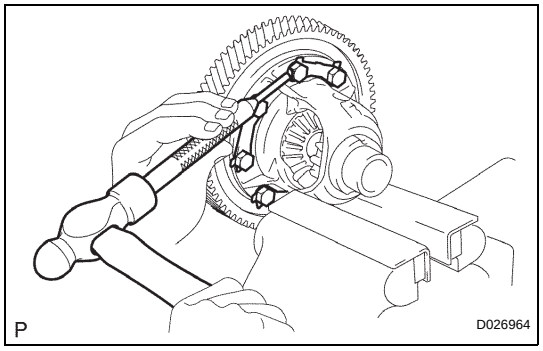

(f) Using a drift punch and hammer, stake the front differential ring gear set bolt lock plate.
HINT:
Stake a claw for the flat side of the nut. For the claw contacting a corner of the nut, stake only the half on the tightened side.